[illegible]

KADEC21 [illegible]

[illegible] KADEC21-Me-N2

[illegible]

[illegible]

[illegible]

[illegible] KADEC21-Me-N2 [illegible] KADEC21-Me-N2 [illegible] KADEC21-Me [illegible] E [illegible]

[illegible]

○[illegible]
○[illegible]
○[illegible]
○[illegible]
○[illegible]
○[illegible]
○[illegible] GPS [illegible]
○[illegible]
○[illegible] 1 [illegible]
○[illegible]
○[illegible]
○−[illegible] ℃ [illegible] ℃ [illegible]
○[illegible] / [illegible] ([illegible]) / [illegible]
○[illegible] ([illegible] / [illegible] / [illegible] / [illegible]) [illegible]
○[illegible]
○[illegible]
○[illegible]
○[illegible]
○[illegible]
○[illegible]
○OTA [illegible]

[illegible]

[illegible].[illegible]
[illegible].[illegible]
[illegible].[illegible]
[illegible].[illegible]
[illegible].[illegible]
[illegible].[illegible]
[illegible].[illegible]
[illegible].[illegible]

⚠ [illegible]

※[illegible]
※[illegible]
※[illegible]
※[illegible]
※Windows [illegible]

[illegible]
[illegible] 001-0025 [illegible] − [illegible]
TEL. 011-708-0230 FAX. 011-708-0232
http://www.north-one.net/

[illegible] 2009 [illegible] 02 [illegible] 24 [illegible]

□.□□□□□□□□□

□−□.□□□□

□□□□[UP][DOWN]	□□□□□□□□□□□□□□□□□□□□□□□□
□□□□[ENTER]	□□□□□□□□□□□□□□□
□□□□□□	□□□□□□□□□□□□□□□□□□□□□□□
□□□□□□	□□□□□□□□□□□□□□□□□□□□□□□
□□□□□□□□□	LCD□□□□□□□□□□□□□□□□□□□□□□
□□□□□□□	□□□□□□□□□□□□□□□
□□□□□□□□□□	RS-232C□□□□□□□□□□□□□□□□□□□□□□□□ □□□□□□□□□□□□□□
RS-232C□□□□	□□□□□□□□□□□□□□□□□□□□□□□□□
□□□□□	□□□□□□□□□□□□□□□□□□□□□□□□□□□□
□□□□□□□□	□□□□□□□□□□□□□□□□□□□□□□□□□□□□ DC6□9V□□□□□□□□□□□□□□□□□□□DC9V□□□ □□□□□□□□□□□□□□□□DCDC□□□□□□□□□□ □□□□□□□□
□□□□□□	□□□□□□□□□□□□□□□□□□□□□□
□□□□	□□□□□□□□□□□□□□□□□□□□□□□□□□□□ □□□□□□□□□□□
□□□□□□□□	□□□□□□□□□□□□□□□□□□□□
□□□□□□□□	□□□□□□□□□□□□□□□□□□□□□□□□□□□□ □□□□□□□□□□□□□□□□□□□ON/OFF□□□□
□□□□□□□□	□□□□□□□□□□□□□□□□□□□□
□□□□□	□□□□□□□□□□□□□□□□

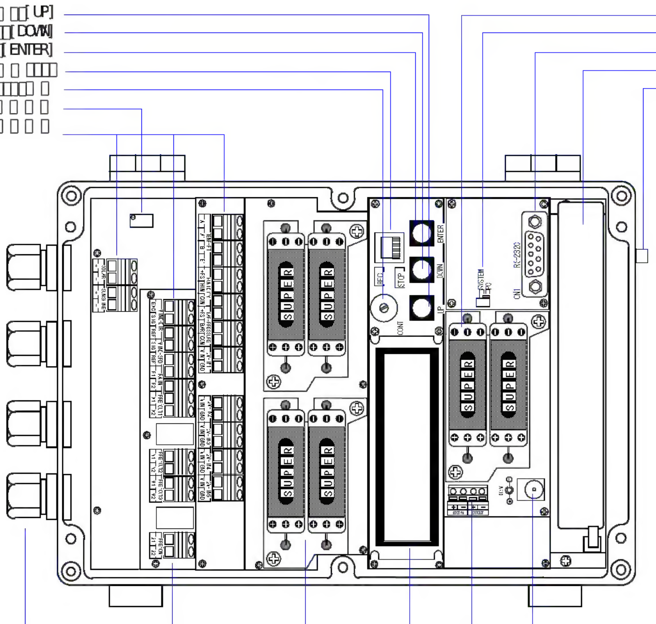

□－□.□□□□

□□□□□□□□□□□□

□□□□□□□[REC]□□□□□□□□□□□□□□□□□□□□□□□□□□□□□□[STOP]□□□□□□□□□□□□□□□□□□□□□

□□□□□□□□□□□□

□□□□□□□□□　□□□□

□□□□□□□□□　□□□□

□□□□□□□□□□□　□□□□

□□□□□　□□□□□□□□□

□□□□□□□□□□　□24□□

□□□□□□　□1ch=□□□□□□2ch=□□□□□□□□□□□□
3ch=□□□4ch=□□□5ch=□□□6ch=□□□□7ch=□□□□
8ch=□□□9ch=□□□□10ch=□□□□11ch=□□□
12ch=□□□□13ch=□□□

□□□□□□□□

□□□□□□□□□□□□□□□□□□□□□□□□□□□□□[UP]□□□[DOWN]□□　□□□□□□□□□□□□□□□[ENTER]□□□□□□□□□□□□□□□□□□□□□□□□□□□□□□[UP]□□□[DOWN]□□□□□□□[ENTER]□□□□□□□□

※□□□□□□□□□□□□□□□
※□□□□□□□□□□□□□□□□□□□□□□□□□□□□□□□□□□
※□□□□□□□□□□□□□□□□□□□□□□□□□

□□□□□□□□□□□□□

□□－□□□□□□□□□□□□□□□□□□□□□□□□□□□□□□□　□□□□□□□□□□□□□□□□□□□□□□□□□□□

※□□□□□□□□□□□□□□□□□□□□□□□□□
□□□□□□□□□□□□

□□□□□□2□□□□□□□□□□□□□□□□□□□

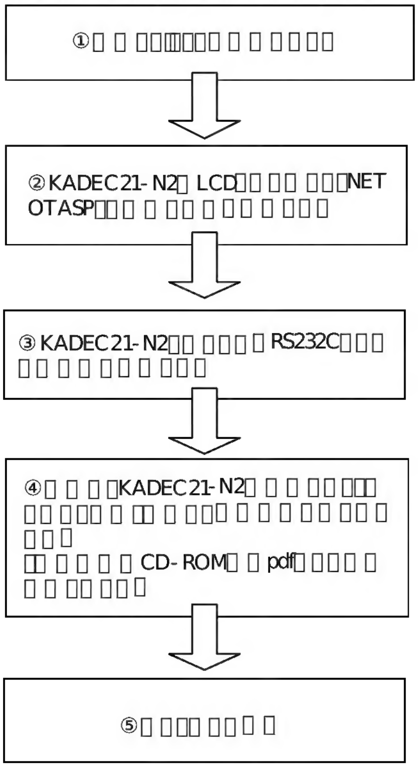

[illegible]

[illegible]

KADEC21-Me[illegible]N2[illegible]SC[illegible]m[illegible]P17[illegible]

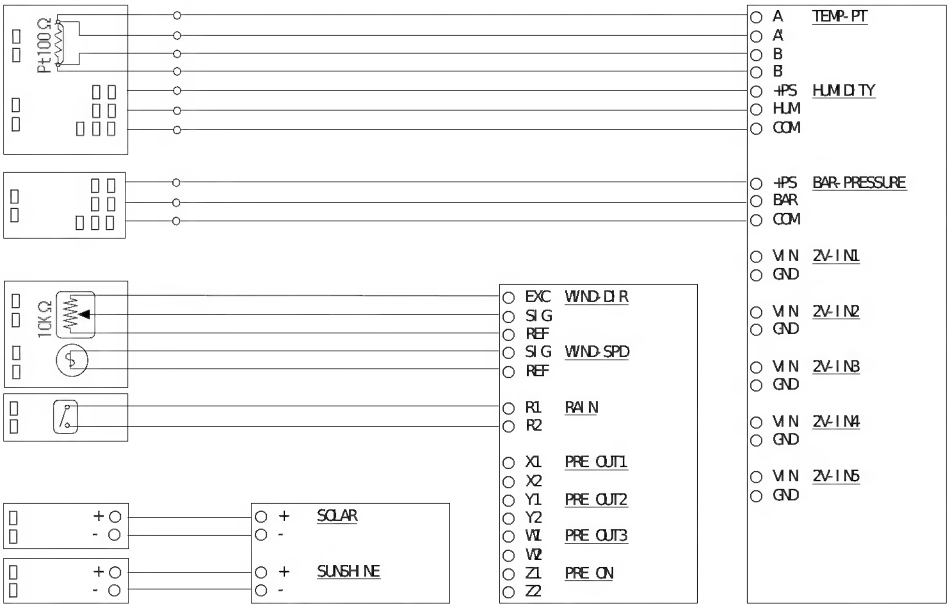

[illegible]

[illegible]

[illegible]

[illegible]

[illegible]

[illegible]

[illegible]

[illegible]KADEC21-Me[illegible]N2[illegible]

[illegible]

[illegible]

[illegible]

[illegible]KADEC21-Me[illegible]N2[illegible]

□□□□□□□□□

□□□

□□□□□□□□□□□□

□□□□□□□□□□□□□□□□□□□□□□□□□□KADEC21-Me□□□

□□□□□□□□□

□□

□□□□□□□□□□□□

□□□□□□□□□□□□□□□□□□KADEC21-Me□N2□□□□□□□□□□□□□□□□□□□□□□□□□□□□□□□□□□

□□□□□□□□□□□□□

□□□□□□□□□□□□□□□□□□□□□□□□□□□□□□□□−□□□□□□□□□□□□□□□□□□□□□□□□□□□□

□□−□□□

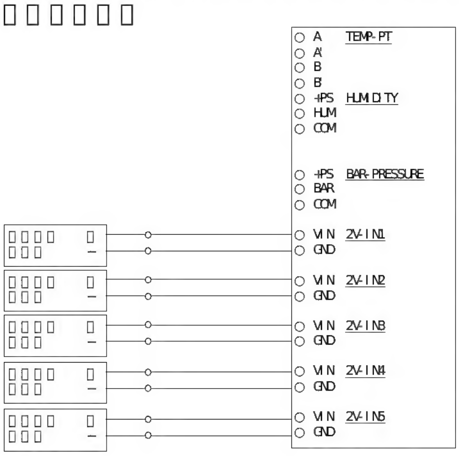

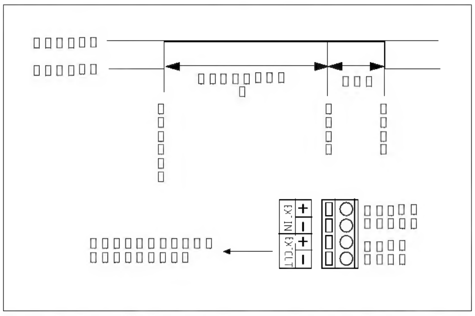

※□□0sec:□□□□□□□□□□□□□□□□□□□□□□□□□□□□OFF□□□□□□□□□□□□□□□□□□□

□　□	□□□□
□□□□	DC30V/1A AC30V/0.5A
□□□□□□	1A
□□□□max	AC125V, DC125V
□□□□max	1A

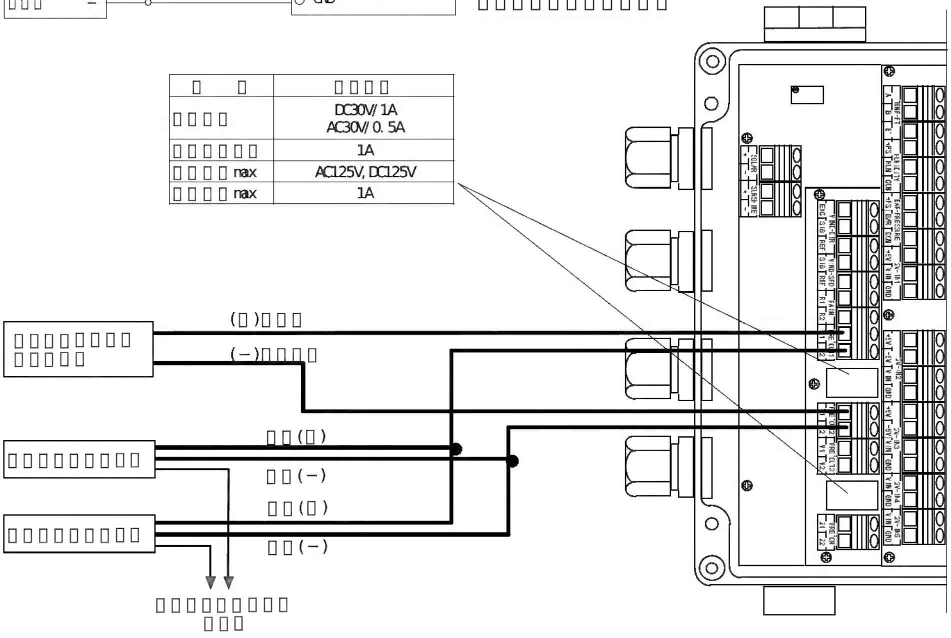

[illegible]

[illegible]

[illegible]

[illegible]

○[illegible]

○[illegible]

[illegible]

[illegible]

※[illegible]

※[illegible]

※[illegible]

※[illegible]

[illegible]

[illegible]

※[illegible]

※[illegible]

※[illegible]

※[illegible]

[illegible]

[illegible]

※[illegible]

※[illegible]

※[illegible]

[illegible]

※ KADEC21-Me[illegible]N2[illegible]

[illegible]

※[illegible]DC6[illegible]9V[illegible]
AC [illegible]DC9V[illegible]DCDC[illegible]

※[illegible]

※[illegible]

※ KADEC21-Me[illegible]N2[illegible]Ω[illegible]

※[illegible]

[illegible].[illegible]

[illegible]−[illegible].[illegible]

[illegible]RS-232C[illegible]

[illegible]USB[illegible]USB-RS232C[illegible]

[illegible]

[illegible]

[illegible]

[illegible]-[illegible]

[illegible]	[illegible]
[illegible]	[illegible]
[illegible]	300[illegible]600[illegible]1200[illegible]2400[illegible]4800[illegible]9600[illegible]19.2K[illegible]38.4K[illegible]57.6K[illegible]115.2KBPS
[illegible]	8[illegible]
[illegible]	NON[illegible]
[illegible]	1[illegible]
[illegible]	XON[illegible]
[illegible]	CR[illegible]LF
[illegible]	DB-9S

[illegible]	[illegible] JIS	[illegible] EIA	[illegible]	[illegible]	[illegible]
1	CD	DCD	[illegible]	Data Carrier Detect	[illegible]
2	RD	RXD	[illegible]	Receiving Data	[illegible]
3	SD	TXD	[illegible]	Sending Data	[illegible]
4	ER	DTR	[illegible]	Data Terminal Ready	[illegible]
5	SG	GND	[illegible]	Signal Ground	
6	DR	DSR	[illegible]	Data Set Ready	[illegible]
7	RS	RTS	[illegible]	Request To Send	[illegible]
8	CS	CTS	[illegible]	Clear To Send	[illegible]
9	RI				

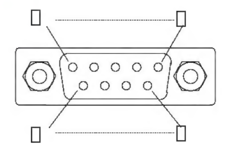

[illegible]

KADEC21[illegible]RS-232C[illegible]

[illegible]−[illegible]

SYSTEM[illegible]

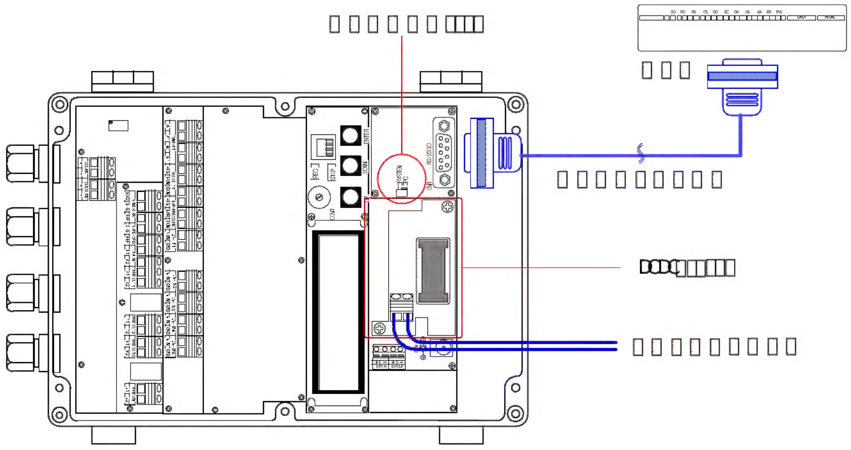

[illegible]

[illegible] [ENTER] [illegible] [UP] [illegible] [DOWN] [illegible]

[illegible]

[illegible]	[illegible]	[illegible]	[illegible]
[illegible]	[illegible]		[illegible]
ROM [illegible]	[illegible]	[UP][DOWN] [ENTER]	[illegible]
[illegible]	[illegible]	[UP][DOWN] [ENTER]	[illegible]
[illegible]	[illegible]	[UP][DOWN] [ENTER]	[illegible]
[illegible]	[illegible]	[UP][DOWN] [ENTER]	[illegible]
[illegible]	[illegible]	[UP][DOWN] [ENTER]	[illegible]
[illegible]	[illegible]	[UP][DOWN] [ENTER]	[illegible]
[illegible]	[illegible]	[UP][DOWN] [ENTER]	[illegible]
[illegible]	[illegible]	[UP][DOWN] [ENTER]	[illegible]
[illegible]	[illegible]	[UP][DOWN] [ENTER]	[illegible]
[illegible]	[illegible]	[UP][DOWN] [ENTER]	[illegible]
[illegible]	[illegible] 25	[UP][DOWN] [ENTER]	[illegible]
[illegible]	[illegible]	[UP][DOWN] [ENTER]	[illegible]
[illegible]	[illegible] ■■■■■■	[UP][DOWN] [ENTER]	[illegible]
[illegible]	[illegible]	[UP][DOWN] [ENTER]	[illegible]
[illegible]	[illegible]	[UP][DOWN] [ENTER]	[illegible]
[illegible]	[illegible]	[UP][DOWN] [ENTER]	[illegible]
[illegible]	[illegible]	[UP][DOWN] [ENTER]	[illegible]
[illegible]	[illegible]	[UP][DOWN] [ENTER]	[illegible]
[illegible]	[illegible]	[UP][DOWN] [ENTER]	[illegible]

[illegible]

[illegible]	[illegible]	[illegible] [REC]	[illegible]
[illegible]	[illegible]	[illegible] [STOP]	[illegible]

①Date
②[ENTER]
③[UP][DOWN]
④Change? Yes, No[UP][DOWN]YesNo
[ENTER]

①Time
②[ENTER]
③[UP][DOWN]
④Change? Yes, No[UP][DOWN]YesNo
[ENTER]

①Interval[ENTER]
②[UP][DOWN]
③Change? Yes, No[UP][DOWN]YesNo
[ENTER]
※
※EXTin

①Preset Timer[ENTER]
②[UP][DOWN]OFF
③Change? Yes, No[UP][DOWN]YesNo
[ENTER]
※
※

①After Start
②[ENTER]
③[UP][DOWN][ENTER]
④[UP][DOWN][ENTER]
⑤
⑥Change? Yes, No[UP][DOWN]YesNo
[ENTER]

①COM Speed[ENTER]
②[UP][DOWN]
③Change? Yes, No[UP][DOWN]YesNo
[ENTER]
※

①Mode[ENTER]
②[UP][DOWN][ENTER]
③[UP][DOWN][ENTER]
④Change? Yes, No[UP][DOWN]YesNo
[ENTER]

※[illegible]
[illegible]Enabli[illegible]Disable[illegible]

[illegible]	[illegible]	[illegible]	[illegible]
MeanWS	[illegible]	Volt1	[illegible]
MeanWD	[illegible]	Volt2	[illegible]
MaxWS	[illegible]	Volt3	[illegible]
MaxWD	[illegible]	Volt4	[illegible]
MaxTIM	[illegible]	Volt5	[illegible]
Temp	[illegible]		
Hum	[illegible]		
Rain	[illegible]		
Press	[illegible]		
Sol	[illegible]		
Sun	[illegible]		

※[illegible]
[illegible]

[illegible]
①[illegible]Monitor[illegible]
②[illegible][ENTER][illegible][UP]
[DOWN][illegible][ENTER][illegible]

[illegible]
①[illegible]Data[illegible]
②[illegible]
③[illegible][DOWN][illegible]

[illegible]RTC[illegible]
①[illegible]RTC Adjust[illegible][ENTER][illegible]
②[UP][DOWN][illegible]RTC[illegible][ENTER][illegible]
③[illegible]Change? Yes, No[illegible][UP][DOWN][illegible]Yes[illegible]No[illegible]
[illegible][ENTER][illegible]
※RTC[illegible]RTC[illegible]

[illegible]
①[illegible]Memo[illegible]
②[ENTER][illegible][ENTER][illegible]
③[illegible]
④[illegible][UP][DOWN][illegible][ENTER][illegible]
⑤[illegible]Change? Yes, No[illegible][UP][DOWN][illegible]Yes[illegible]No[illegible]
[illegible][ENTER][illegible]

[illegible]
①[illegible]BATT[illegible]
②[illegible]
③[illegible][ENTER][illegible]
④[UP][DOWN][illegible][ENTER][illegible]
⑤[illegible]BATT RMIN RESET? Yes, No[illegible][UP][DOWN][illegible]Yes[illegible]
[illegible]No[illegible][ENTER][illegible]
※[illegible]
※[illegible]KDC-B6[illegible]
[illegible]KDC-B1[illegible]

[illegible]
①[illegible]Default Setting[illegible]
②[ENTER][illegible]Yes, No[illegible][UP][DOWN][illegible]Yes[illegible]
[illegible]No[illegible][ENTER][illegible]

[illegible] − [illegible] . [illegible]

[illegible]

①[illegible] NET Interval [illegible] [ENTER] [illegible]

②[UP][DOWN] [illegible]

③[illegible] Change? Yes, No [illegible] [UP][DOWN] [illegible] Yes [illegible] No [illegible] [ENTER] [illegible]

※[illegible]

[illegible]

①[illegible] NET Test [illegible]

②[ENTER] [illegible] Yes, No [illegible] [UP][DOWN] [illegible] Yes [illegible] No [illegible] [ENTER] [illegible]

③[illegible] [OK] [illegible] NG [illegible]

[illegible]

①[illegible] NET OTASP [illegible]

②[ENTER] [illegible] Yes, No [illegible] [UP][DOWN] [illegible] Yes [illegible] No [illegible] [ENTER] [illegible]

③[illegible] OTASP [illegible] [OK] [illegible] NG [illegible] OTASP [illegible] OTASP [illegible] OTAPA [illegible] OTA [illegible]

[illegible]

①[illegible] NET OTAPA [illegible]

②[ENTER] [illegible] Yes, No [illegible] [UP][DOWN] [illegible] Yes [illegible] No [illegible] [ENTER] [illegible]

③[illegible] OTAPA [illegible] [OK] [illegible] NG [illegible] OTAPA [illegible] OTASP [illegible]

[illegible]

①[illegible] Module Serial [illegible]

②[ENTER] [illegible] Yes, No [illegible] [UP][DOWN] [illegible] Yes [illegible] No [illegible] [ENTER] [illegible]

③[illegible]

[illegible]

[illegible]

[illegible]

※[illegible]

※[illegible]DC30V/1A, AC30V/0.5A[illegible]

[illegible]1A[illegible]AC125V, DC125V[illegible]1A[illegible]

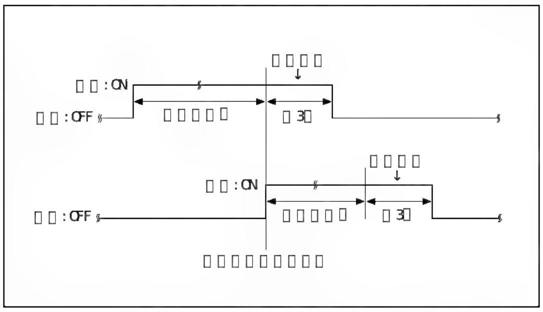

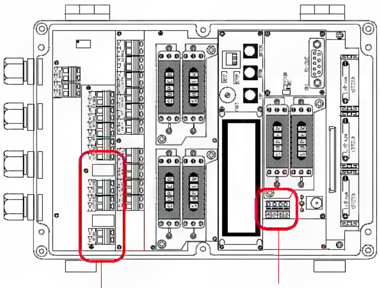

[illegible] EXTOUT[illegible]

[illegible]

[illegible]EXTIN[illegible]

[illegible]EXTin[illegible]

① [illegible] 2～25V

② [illegible] 2～50mA

③ [illegible] 1[illegible]

④ [illegible] 0.1[illegible]

[illegible].RTC[illegible]

RTC[illegible]RTC[illegible]RTC[illegible]

※[illegible]

[illegible]Hz[illegible]Hz[illegible]

[illegible]Hz[illegible]μ[illegible]

[illegible]

[illegible]

[illegible]÷[illegible]

[illegible]

[illegible]

[illegible]÷[illegible]

[illegible]−[illegible]

[illegible]	[illegible]	[illegible]
[illegible]	[illegible]	[illegible]×[illegible]μ[illegible]
[illegible]	[illegible]	[illegible]×[illegible]μ[illegible]
[illegible]	[illegible]	[illegible]×[illegible]
[illegible]	[illegible]	[illegible]×[illegible]
[illegible]	[illegible]	[illegible]×[illegible]
[illegible]	[illegible]	[illegible]×[illegible]

[illegible] − [illegible]. [illegible]

[illegible] ○ [illegible] △ [illegible]

[illegible]

[illegible]

[illegible] − [illegible]. [illegible]

KADEC21 [illegible]

[illegible]

[illegible] 97280 [illegible]

[illegible] 97280 [illegible]

([illegible])

● [illegible]

[illegible]	[illegible]	[illegible]

([illegible])

[illegible]

[illegible] [illegible]

● [illegible]

[illegible]	[illegible]	[illegible]

([illegible])

[illegible]

[illegible]

[illegible] −[illegible]

[illegible]

[illegible]

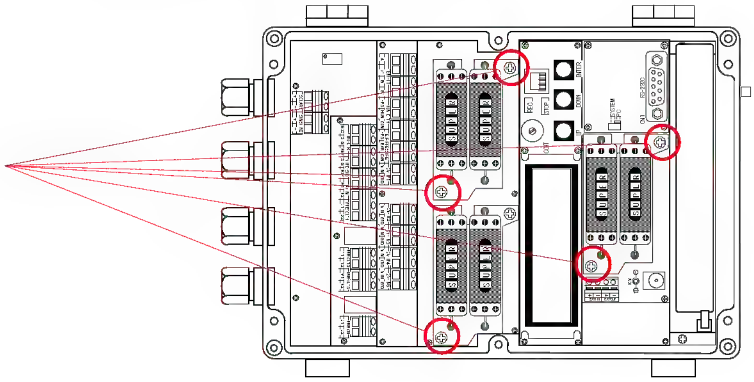

[illegible] −[illegible]

[illegible] B6 [illegible] B1 [illegible]

[illegible]

※[illegible] −[illegible]

※[illegible]

※[illegible]

※[illegible]

※[illegible]

[illegible] −[illegible]

KADEC21-ME-N2 [illegible]

	[illegible]			[illegible]		
[illegible]	[illegible]	[illegible]	[illegible]	[illegible]	[illegible]	[illegible]
[illegible]	194,964	123	4.1	97,482	61	2.0
[illegible]	118,195	223	7.4	59,097	111	3.7
[illegible]	74,305	281	9.3	37,152	140	4.6

[illegible]

※[illegible]

※[illegible]
※[illegible]mAh[illegible]mA[illegible]
[illegible]mAh[illegible]
※CR123A[illegible]－[illegible]℃[illegible]℃[illegible]

[illegible]－[illegible].[illegible]

[illegible]
※[illegible]([illegible])
※[illegible]μ[illegible]2000mAh[illegible]970mWh/cm³)
※[illegible]－[illegible]℃[illegible]℃[illegible]
※[illegible]
※[illegible]Underwriters Laboratories Inc[illegible]

[illegible]－[illegible].[illegible]

[illegible]

[illegible]－[illegible].[illegible]

[illegible]

[illegible]

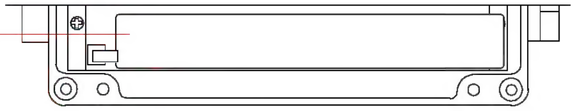

□.□□□□

□−□.□□□□□

□□□□□□2□□□
□□□□/□□□ 0□360° /1°
□□/□□□□ 0□10KΩ/0□360
□□□ □□□□□□□□10□□□□□□□□□□□□□□
□□□□□□□□□□□□□□□□□□□□□□
□□□□□□3□□□
□□□□/□□□ 0□90m/s□0.1m/s
□□/□□□□ 0□918.3□□/0.0□90.0
□□□ □□□□□□□□10□□□□□□□□□□
□□□□□□□□□□□□□□□□□□□□□□
□□□□□□1□□□
□□□□/□□□ -200□+200°C/0.01°C
□□/□□□□ □□□□□□□□NJPt100Ω/0°C4□□□/-200.0□+200.0
□□□ □□□□□□□□□□□□□□□□□□
□□□□□□1□□□
□□□□/□□□ 0□100%RH/0.1%RH
□□/□□□□ 0□1V/0.0□100.0
□□□□/□□ □□□□□/DC5□35VDC(4mA)
□□□ □□□□□□□□□□□□□□□□□□
□□□□□□1□□□
□□□□/□□□ 0□5000mm/0.5mm
□□□□/□□ □□□□□□(□□□□□)/ 0.5mm/□□□
□□□ □□□□□□□□□□□□□□□□□□
□□□□□□□1□□□
□□□□/□□□ 0□2Kw/m² / 0.01KW/m²
□□□□/□□ □□□□/0□10mV□5mV/Kw/m²□
□□□ □□□□□□□□□□□□□□□
□□□□□□□□1□□□
□□□□/□□□ 0□180/1min
□□□□/□□ □□□□□□□□□□□ / 120□/m²□ON□□□□□□
□□□ □□□□□□□□□□□□□□□□□□□□□□□□
□□□□□□1□□□
□□□□/□□□ 600□1100hPa/0.1hPa
□□/□□□□ 0□5V(2/5□□□□□)/600□1100
□□□□/□□ □□□□□□□/DC9.5□24VDC/6mA
□□□ □□□□□□□□□□□□□□□□□□
□□□□□□5□□□
□□□□□□□□ 5□□□□□
□□□□/□□□ 0□±2V/0.1mV
□□□ □□□□□□□□□□□□□□□□□□

□−□.□□□□

□□□□□□□□□□□ 10□20□30□□1□2□3□4□6□8□12□24□□
□□□□□□□ 97,280□□11□□□□311□□/1□□□□
□□□□□□□ 1□□□1□□□□□□□□□/□□□□/□□□□□□□□□□□
□□□ :6□
□□□ :16□□
□□□□:□□□□□□□□□□□□
※□□□□□□□□□□□□□□
□□□□□□□ □□□□□□□□□□
□□□□□□□□ □□□□□□□□□□□□□□□□□□□□

[illegible]－[illegible].[illegible]

[illegible]	RS-232C[illegible]
[illegible]	DSUB9[illegible]
	[illegible]
[illegible]	300[illegible]600[illegible]1200[illegible]2400[illegible]4800[illegible]9600
	19.2K[illegible]38.4K[illegible]57.6K[illegible]115.2KBPS[illegible]38.4KBPS[illegible]
	[illegible]
[illegible]	[illegible]
	[illegible]
[illegible]	[illegible]

[illegible]－[illegible].[illegible]

[illegible]	10[illegible]60[illegible]24[illegible]
[illegible]	CDMA2000 1X [illegible]
	[illegible] 14.4kbps[illegible] 14.4kbps
[illegible]	[illegible]6[illegible]
[illegible]	RF[illegible] [illegible]50Ω

[illegible]－[illegible].[illegible]

[illegible]	[illegible]LCD[illegible]
[illegible]	16[illegible]×2[illegible]
[illegible]	-20[illegible]70℃[illegible]90[illegible]
	[illegible]OFF[illegible]
[illegible]	[illegible]3[illegible]UP/DOWN/ENTER[illegible]
[illegible]	[illegible]1[illegible][REC][illegible]/[STOP][illegible]
[illegible]	LCD[illegible]-10℃[illegible]
[illegible]	[illegible]

[illegible]－[illegible].[illegible]

[illegible]	[illegible]ON/OFF[illegible]
	[illegible]1[illegible]59[illegible]OFF[illegible]
[illegible]	[illegible]OFF[illegible]
[illegible]RTC[illegible]	[illegible]
	[illegible]
[illegible]	[illegible]LCD[illegible]10[illegible]
	[illegible]
	[illegible]

[illegible]－[illegible].[illegible]

[illegible]	[illegible]:43mA-Typ/93mA-Max[illegible]OFF[illegible]
	46mA-Typ/96mA-Max[illegible]ON[illegible]
	[illegible]:0.34mA[illegible]
	[illegible]:48mA-Typ/98mA-Max[illegible]
[illegible]	[illegible]3[illegible]NRH-B6:[illegible]
	[illegible]6[illegible]
	[illegible]-5℃[illegible]40℃[illegible]
[illegible]	[illegible]
	[illegible]AC[illegible]DC9V[illegible]
[illegible]	[illegible]

[illegible]－[illegible].[illegible]

[illegible]OS	I-TRON[illegible]OS[illegible]
[illegible]	
[illegible]	-20[illegible]+80℃
[illegible]	240W×160D×91H/1.5Kg[illegible]

[illegible]

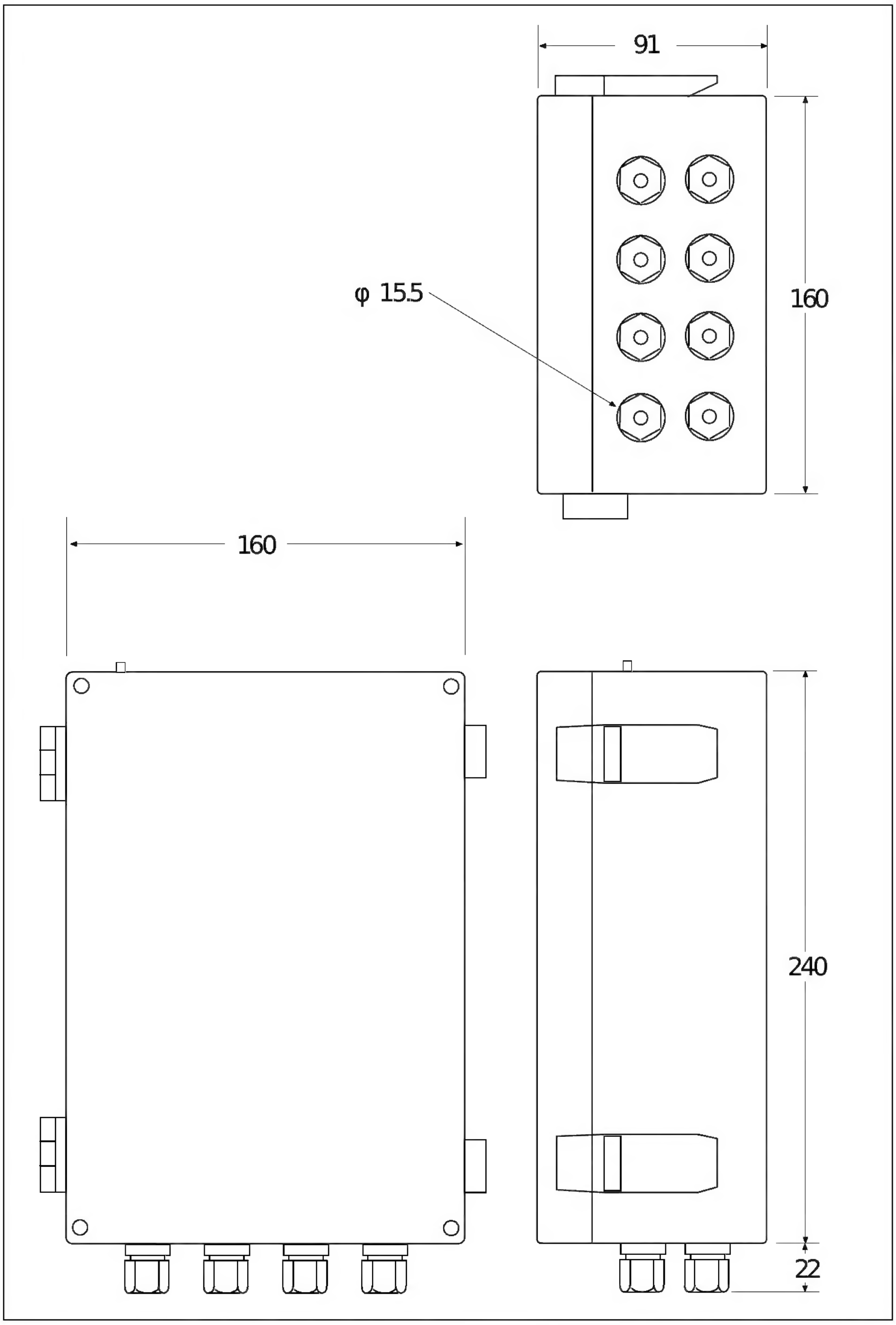
91
160
φ 15.5
160
240
22